版次	ECN 编码	描述		设计/日期
1	EL24050029	初版发行		潘健_2024/05/17
		改前	改后	

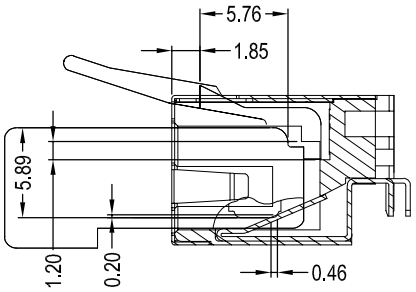

MATE RJ45 PLUG

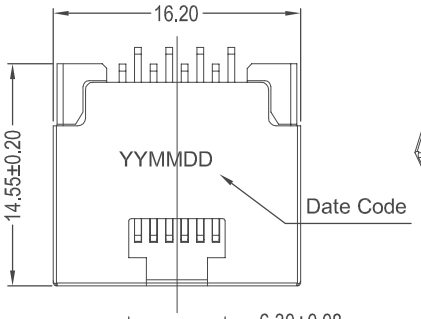

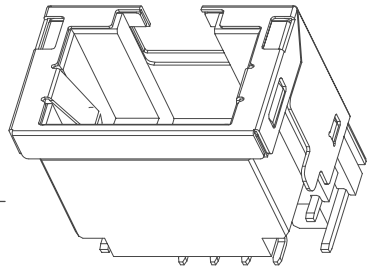
3D VIEW

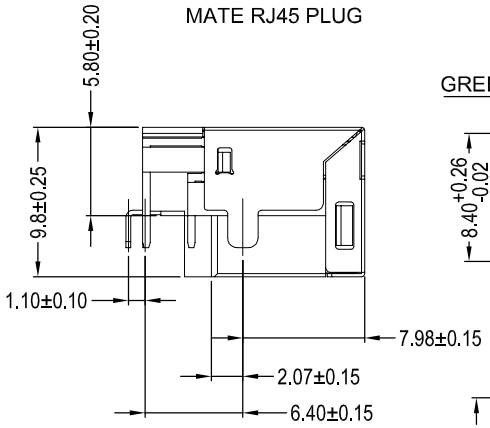

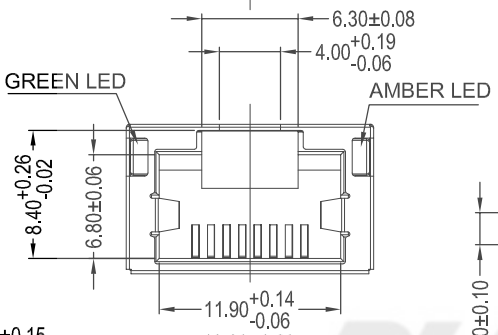

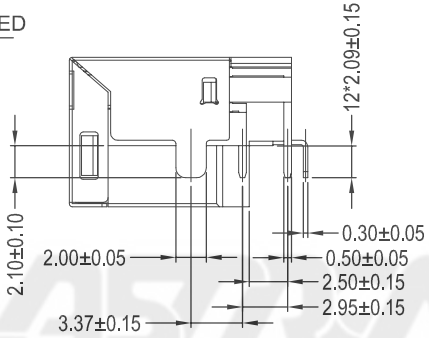

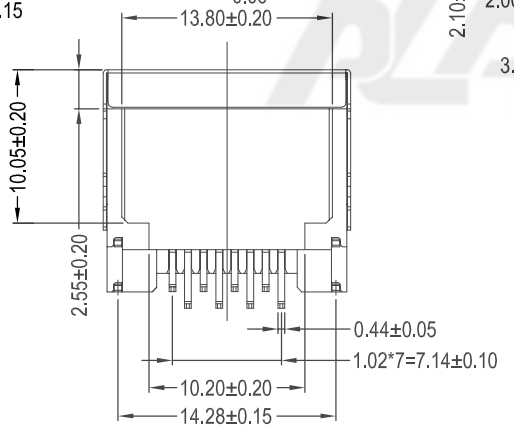

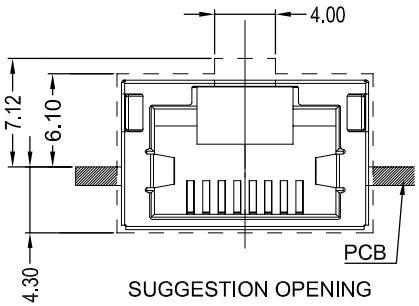

SUGGESTION OPENING

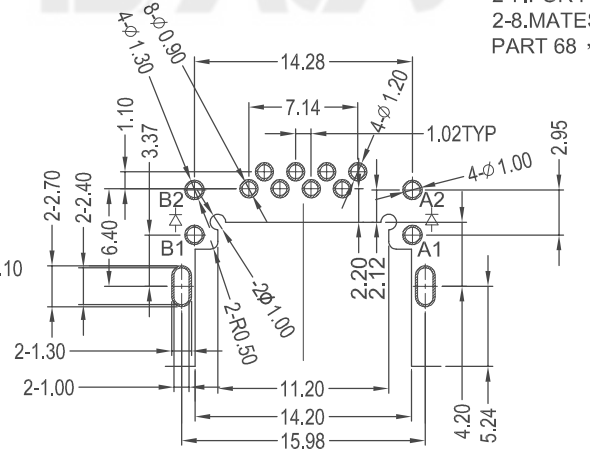

RECOMMENDED PCB LAYOUT

NOTES：

1.MATERIAL：

1-1：HOUSING：PA10T+35%GF(VICNYL R635NH)；UL 94V-0，
COLOR：BLACK

1-2：TERMINAL：PHOSPHOR BRONZE(C5210R-EH)；T=0.30mm
TREATMENT：
1.GOLD FLASH ON CONTACT AREA，MATTE SN 80u" MIN
ON SOLDER TAIL，ALL OVER NI 30u" MIN.
2.GOLD 50u" MIN ON CONTACT AREA，MATTE SN 80u"
MIN ON SOLDER TAIL，ALL OVER NI 30u" MIN.

1-3：SHELL：SUS(201)；T=0.20mm，TREATMENT：50u"NI

1-4：LED：GREEN/AMBER，TREATMENT：TIN

1-5：FIXED PIECE：SUS(301)；T=0.20mm

2.SPECIFICATIONS：

2-1.VOLTAGE RATING：150VAC MAX，

2-2.CURRENT RATING：1.5AMP MAX.

2-3.INSULATION RESISTANCE：200MQ MIN. AT 500V DC.

2-4.DIELECTRIC WITHSTANDING VOLTAGE：
500V AC 60HZ 1MINUTE.

2-5.DURABILIY：5000 CYCLES.

2-6.OPERATING TEMPERATURE：-30℃TO+70C.

2-7.FOR REFLOW SOLDERING LEAD-FREE PROCESS.

2-8.MATES WITH MODULAR PLUG CONFORMING TO FCC
PART 68，SUBPARTF

JABCADKBXK

A:RJ45

K:PCB to Top
Height 5.8mm

B:Gold Plating

K:Reel

A:Gold Flash
M:50U"

Node	Color		Dominant Wavelength	Forward Voltage	Luminors Intensity
A1(+) A2(-)	Amber	A1 A2	585~595nm	2.6V MAX	1~15MCD
B1(+) B2(-)	Green	B1 B2	565~574nm	2.6V MAX	1~15MCD

TOLERANCE TABLE	
X. ± 0.30	X.° ± 3°
.X ± 0.25	.X° ± 2°
.XX ± 0.20	

SCALE 2:1	DRAWN	潘健	DATE	2024/05/17	DWG. NO. 600-0000-2442
UNIT mm	CHECK	李晨涛	DATE	2024/05/18	PARTS NO.(INTENDED USE) JABCADKBXK
SIZE A4	APPROVE	朱宁静	DATE	2024/05/18	

TITLE: RJ45 PCB JACK (板上5.8，DIP2.1) CUSTOMER DRAWING

REV. 1

SHEET 1/1